NOTES:

1. STAMP LETTERS AS SHOWN

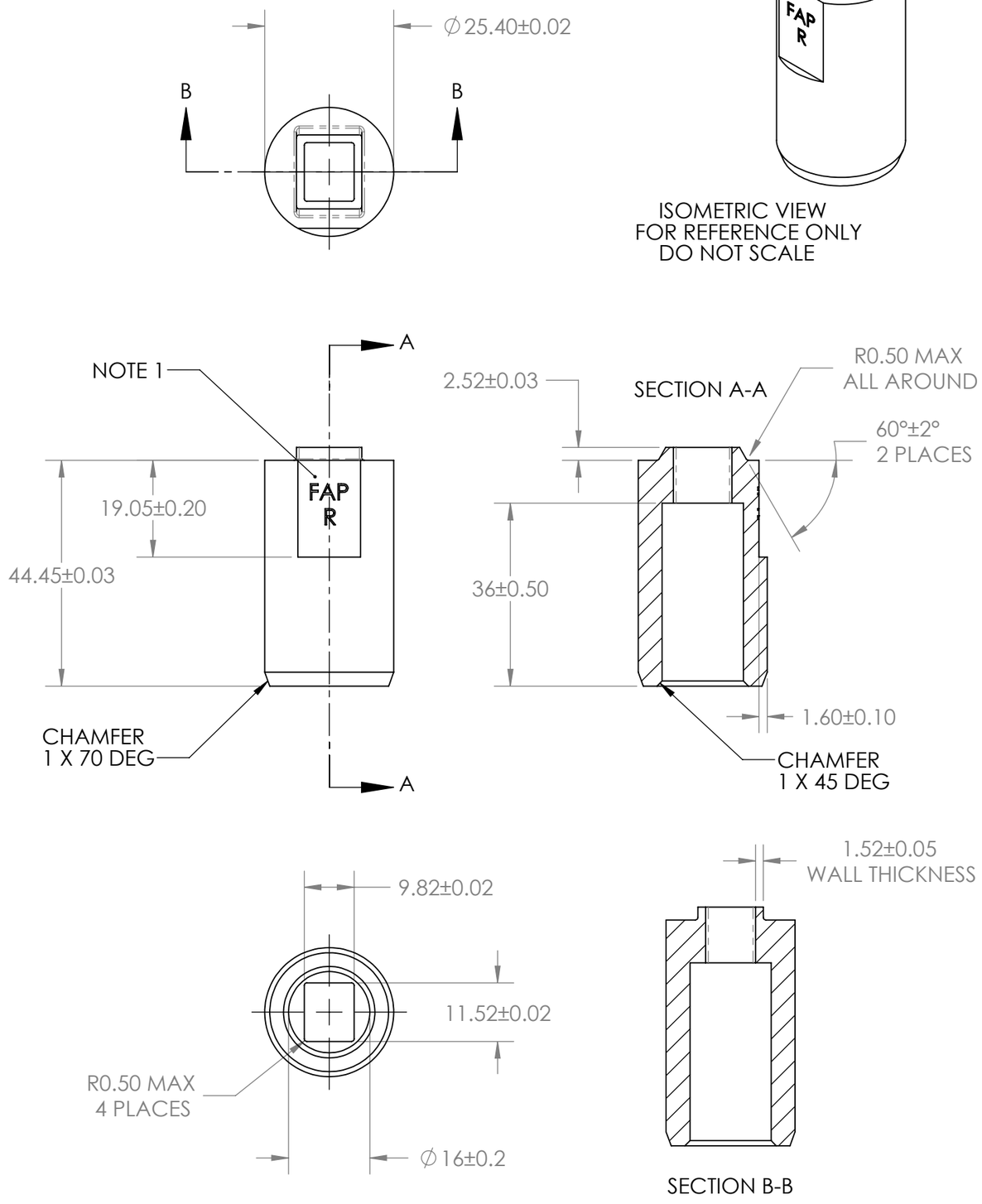

FASTENER ADVANCE PRODUCTS

750 HOGAN ROAD
MANCHESTER, MICHIGAN
48158, USA

(734) 428-8070
WWW.FASTENERADVANCE.COM

REV	LOC	NOTES	DATE
A		RELEASED FOR PRODUCTION	2010.01.06

DEBUR AND BREAK SHARP EDGES	UNLESS OTHERWISE SPECIFIED: DIMENSIONS ARE IN MILLIMETERS	A3	PROPERTY OF FASTENER ADVANCE PRODUCTS (FAP)
MATERIAL: M2 TOOL STEEL	FINISH: HEAT TREAT 60-64 Rc		TITLE: R BODY BUTTON
CONFIDENTIALITY: THE INFORMATION CONTAINED ON THIS DRAWING IS CONFIDENTIAL AND CANNOT BE COPIED OR SENT TO OTHER PARTIES WITHOUT PRIOR APPROVAL.	PART WEIGHT (GRAMS): 111 G		PART NUMBER: R 175X100
		SCALE: 2:1	DO NOT SCALE DRAWING